Section A: Multiple Choice Questions

Thermochemistry and Energy PAST SAC questions:

Question 1

The temperature of a bomb calorimeter, and its contents, increased by 8.64 ºC when a 4.127 g sample of ethyne, C_2H_2, was ignited in the bomb. The calibration factor for the apparatus was 23.9 kJ $^oC^{-1}$. The thermochemical equation that would best describe this reaction would be:

a) $C_2H_{2(g)} + \frac{5}{2}O_{2(g)} \longrightarrow 2CO_{2(g)} + H_2O_{(l)}$ $\Delta H = -650$ kJ mol^{-1}

b) $C_2H_{2(g)} + \frac{5}{2}O_{2(g)} \longrightarrow 2CO_{2(g)} + H_2O_{(l)}$ $\Delta H = -2600$ kJ mol^{-1}

c) $2C_2H_{2(g)} + 5O_{2(g)} \longrightarrow 4CO_{2(g)} + 2H_2O_{(l)}$ $\Delta H = -1300$ kJ mol^{-1}

d) $2C_2H_{2(g)} + 5O_{2(g)} \longrightarrow 4CO_{2(g)} + 2H_2O_{(l)}$ $\Delta H = -2600$ kJ mol^{-1}

Question 2

Octane, a major component of petrol, burns in air according to the following thermochemical equation.

$$\mathbf{2C_8H_{18(l)} + 25O_{2(g)} \longrightarrow 16CO_{2(g)} + 18H_2O_{(g)} \quad \Delta H = -10,108 \text{ kJ mol}^{-1}}$$

Combustion of octane may also be represented by the following thermochemical equation.

$$\mathbf{2C_8H_{18(l)} + 25O_{2(g)} \longrightarrow 16CO_{2(g)} + 18H_2O_{(1)} \quad \Delta H = -10,900 \text{ kJ mol}^{-1}}$$

Using the information provided for octane combustion, the enthalphy change (ΔH) for the reaction:

$\mathbf{H_2O_{(l)} \longrightarrow H_2O_{(g)}}$ is equal to:

a) + 44 kJ mol^{-1} b) -44 kJ mol^{-1} c) + 792 kJ mol^{-1} d) - 792 kJ mol^{-1}

Question 3

Compared to energy produced from fossil fuels, nuclear energy

a) Is a renewable resource

b) Will produce more energy from a given mass of fuel;

c) Will produce less energy from a given mass of fuel;

d) Is cheaper to set up and operate, making it cheaper to the consumer

Question 4

Hydrogen can be produced commercially using sulfur dioxide and water as starting materials. The overall equation is:

$$H_2O_{(g)} \longrightarrow H_{2\,(g)} + \frac{1}{2}O_{2\,(g)}$$

Using the equations below, determine the enthalpy change for this reaction

$SO_{2(g)} + 2H_2O_{(g)} + Br_{2(g)} \longrightarrow H_2SO_{4(l)} + 2HBr_{(g)}$	$\Delta H = -137.3$ kJ mol^{-1}
$2H_2O_{(g)} + 2SO_{2(g)} + O_{2(g)} \longrightarrow 2H_2SO_{4(l)}$	$\Delta H = -550.8$ kJ mol^{-1}
$2HBr_{(g)} \longrightarrow H_{2(g)} + Br_{2(g)}$	$\Delta H = +103.7$ kJ mol^{-1}

a) -584.4 kJ mol^{-1}	b) + 517.2 kJ mol^{-1}	c) -309 kJ mol^{-1}	d) + 241.8 kJ mol^{-1}

Question 5

Which of the following are factors in determining whether a chemical reaction is endothermic or exothermic?

i **The magnitude of the activation energy**
ii **The strength of the bonds in the reactants and products**
iii **The presence of a catalyst**
iv **The physical states of the reactants**

a) i and ii	b) i, ii and iv	c) all of the above	d) ii and iv

Redox, Galvanic cell, Fuel Cell & Batteries PAST SAC questions:

Question 6

The equations for two spontaneous reactions are:

$$3Cr_{(s)} + 2Ga^{3+}_{(aq)} \longrightarrow 3Cr^{3+}_{(aq)} + 2Ga_{(s)}$$

$$Ga_{(s)} + 3Cu^{2+}_{(aq)} \longrightarrow 3Cu^{+}_{(aq)} + Ga^{3+}_{(aq)}$$

The strongest oxidant according to these equations is:

a) Ga^{3+}	b) Cu^{2+}	c) Cu^{+}	d) Cr^{3+}

Questions 7 and 8 refer to the following information.

Experiment 1:

Two VCE students, Katie and Michelle, recently conducted the following experiment to compare the reactivity of two metals, X and Y. A strip of each metal was placed in a solution containing the cation of the other metal. The two solutions were allowed to stand overnight and observations were then made.

The results are shown below.

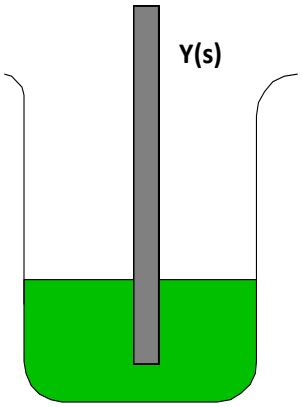

Observations: A deposit of X forms
Mass of Y decreases

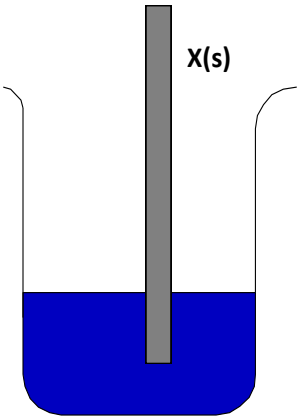

No change

Experiment 2:

The galvanic cell shown below was then constructed using metals X and Y, along with 1.0 M solutions of $X(NO_3)_2$ and $Y(NO_3)_2$. The salt bridge was constructed using filter paper dipped in KNO_3 solution. A cell voltage of 0.78 V was recorded.

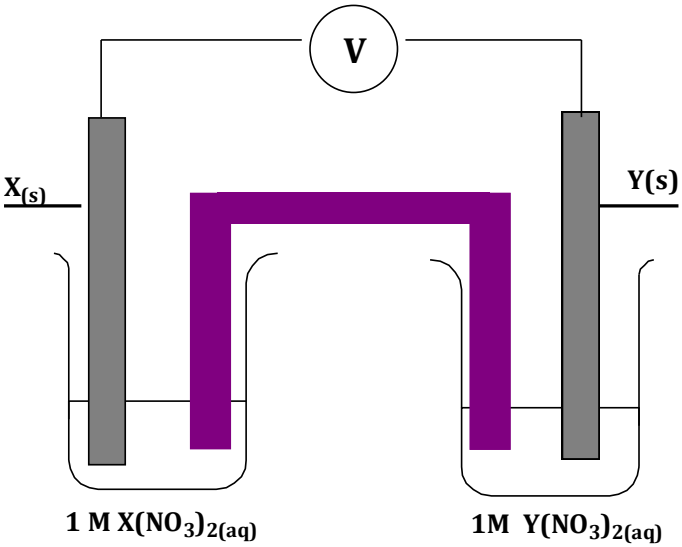

Question 7

Which of the following statements is consistent with the observations made during **experiment 1**?

a) The NO_3^- ion is a stronger reductant than metal X.

b) Metal Y is a strong reductant than metal X.

c) The Y^{2+} ion is a stronger oxidant than the X^{2+} ion

d) Water is a stronger oxidant than the X^{2+} ion.

Question 8

In **experiment 2**, which of the following correctly identifies the electrodes in the galvanic cell?

a) Electrode X is the positively charged anode.

b) Electrode X is the negatively charged anode.

c) Electrode Y is the positively charged anode.

d) Electrode Y is the negatively charged anode.

Question 9

Which of the following correctly identifies the flow of charged particles in this cell?

	Flow of cations from the salt bridge to the	Flow of electrons
a)	Y^{2+}/Y half-cell	From X to Y
b)	Y^{2+}/Y half-cell	From Y to X
c)	X^{2+}/X half-cell	From X to Y
d)	X^{2+}/X half-cell	From Y to X

Question 10

A fuel cell may be constructed using methanol and oxygen contained in an alkaline electrolyte.
The overall reaction for the methanol/oxygen fuel cell is:

$$2CH_3OH_{(l)} + 3O_{2\,(g)} \longrightarrow 2CO_{2\,(g)} + 4H_2O_{(l)}$$

The reaction occurring at the anode would be:

a) $O_2\,(g) + 4H^+_{(aq)} + 4e^- \longrightarrow 2H_2O_{(l)}$

b) $O_2\,(g) + 2H_2O_{(l)} + 4e^- \longrightarrow 4OH^-_{(aq)}$

c) $CH_3OH_{(l)} + H_2O_{(l)} \longrightarrow CO_{2\,(g)} + 6H^+_{(aq)} + 6e^-$

d) $CH_3OH_{(l)} + 6OH^-_{(aq)} \longrightarrow CO_{2(g)} + 5H_2O_{(l)} + 6e^-$

Section B: Short Answer Questions

Thermochemistry and Energy PAST SAC questions:

Question 1

A strategy to counter Carbon dioxide emissions and reduce the greenhouse effect is to use fuels that provide a better CO_2 efficiency. This efficiency can be calculated as shown below:

$$\textbf{CO}_2\textbf{ efficiency} = \frac{\textit{energy released in kJ per kg of fuel}}{\textit{Carbon dioxide emission in grams per kg of fuel}}$$

Consider the fuels, methane CH_4 and ethanol CH_3CH_2OH.

a) Calculate the energy released in kJ per kg of

(i) Methane

1 mark

(ii) Ethanol

1 mark

b) Calculate the mass, in g, of CO_2 emitted per kg of

(i) Methane

2 marks

(ii) Ethanol

2 marks

(ii) Calculate the CO_2 efficiency for the two fuels and state which would be more efficient in reducing greenhouse gases.

3 marks

d) Other than the cost or whether ethanol and methane is derived from a renewable or non-renewable energy source, state another factor that would be considered when selecting between the suitability of ethanol and methane as a fuel

1 mark

Total 10 marks

Question 2

For the reaction,

$$C_{(s)} + CO_{2\,(g)} \longrightarrow 2CO_{(g)}$$

- The reactants have an enthalpy of – 390 kJ mol^{-1}.
- The forward E_a is 220 kJ mol^{-1}
- The reverse E_a is 22.7% less than the forward E_a

a) Use the above information to draw the energy profile for this reaction.

3 marks

b) How does the stability of the reactants compare to the stability of the products?

1 mark

c) What is the ΔH value for this reaction?

1 mark

d) Calculate the activation energy for the reaction, $CO \longrightarrow \frac{1}{2}CO_{(g)} + \frac{1}{2}C_{(s)}$

1 mark

Total 6 marks

Question 3

Biodiesel can be used to run diesel engine motor vehicles and can be used alone or blended with petrol diesel. Biodiesel can be formed from recycled cooking oil in a two stage process.

a. In the first stage the cooking oil is filtered then hydrolysed. What is the purpose of the hydrolysis reaction?

_____

_____

1 mark

b. During the second stage the biodiesel molecule is produced. Name the type of reaction that is used to produce this molecule and the by-product that is formed.

Reaction: _____

By-product: _____

2 marks

c. Write an overall balanced equation for the production of the biodiesel 'methyl palmitoleate' from its fatty acid (Note: states are not required).

1 mark

d. Explain why Biodiesel can be referred to as a "carbon neutral" fuel source.

_____

_____

_____

_____

_____

2 marks

Total 6 marks

Redox, Galvanic cell, Fuel Cell & Batteries PAST SAC questions:

Question 4

In remote locations without connection to the electricity grid, the use of energy storage batteries which are recharged by a renewable energy source may provide a sustainable solution to the problem of electricity supply.
The simplified diagram below shows the important features of the zinc-bromine flow battery, which makes use of the reaction between $Zn_{(s)}$ and $Br_{2(l)}$. In chamber A, zinc is present and in chamber B, there is Bromine, $Br_{2(l)}$

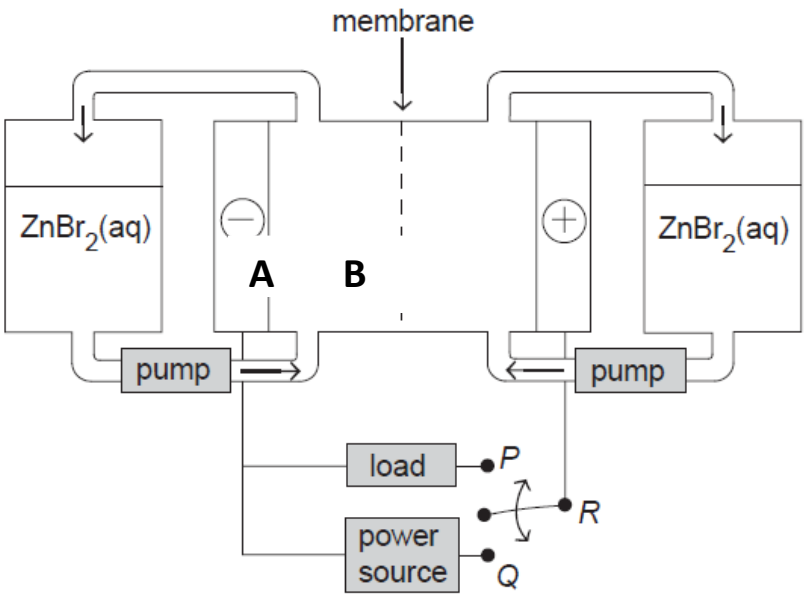

The electrodes are made from inert, electrically conductive material, and a special membrane separates the electrode chambers. When the switch connects *P* to *R*, the battery produces electricity. By connecting *Q* to *R*, an external power source will recharge the battery.

a) Write the half-equation for the reaction occurring at the cathode when the battery is discharging.

2 marks

b) In what way does the anode change as the battery is discharging?

1 mark

c) An important feature of the battery is the special membrane.

i) What role does the membrane have in the operation of the battery during discharge?

1 mark

ii) Bromine cannot pass through the membrane.
Explain the importance of this restriction when the battery is being recharged.

1 mark

d) The zinc-bromine flow battery produces a voltage of 1.67 volts per cell. This is below the predicted value from the electrochemical series. Suggest one possible reason for this lower than expected value.

1 mark

e) A useful feature of the battery is its ability to be recharged using renewable energy sources. Outline how the battery could be recharged using solar energy.

2 marks

Total 8 marks